ADC Lab Logbook

Part 4 | Section 4: Power Amplifier (Output) Stage

Section 4: Power Amplifier (Output) Stage

CE Amplifier — Class B Push-Pull Output Stage

Circuit and Bias Design

The output stage of an op-amp must present a low output resistance so that it can drive external loads without a significant voltage drop. The common-collector (emitter-follower) topology achieves this through resistance reflection, reducing the output resistance by a factor of (1 + β):

$$R_{out} = R_{in} / (1 + \beta)$$

A class B push-pull configuration using a matched NPN/PNP pair (T_1 /T_2) was implemented with a ±5 V split supply and a 1.8 kΩ load resistor. T_1 conducts during positive half-cycles and T_2 during negative half-cycles, together providing near-unity voltage gain over a wide output swing.

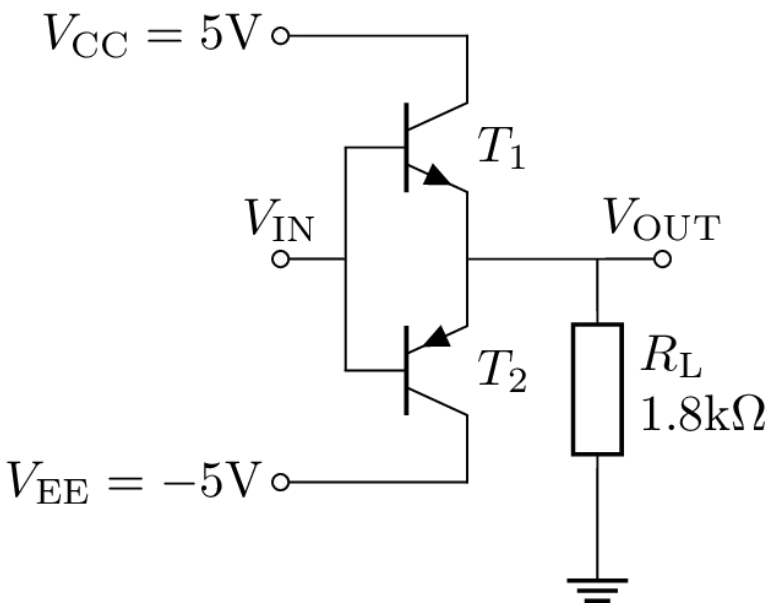

Crossover Distortion

Each transistor enters the active region only when $|V_{BE}| > 0.55$ V. In the range $|\Delta V| < 0.55$ V, both transistors remain in cut-off and no output current flows, producing a characteristic dead zone in the output waveform known as crossover distortion.

A transient simulation was performed with a 1 kHz sinusoidal input (amplitude 1 V) over 5 ms. The output waveform exhibits the expected flat region at zero-crossing. The measured voltage gain was characterised at several amplitudes:

1.00 V: Gain = 0.39 | **1.25 V:** Gain = 0.50 | **1.50 V:** Gain = 0.57 | **2.50 V:** Gain = 0.74

The gain increases with amplitude because the crossover dead-band (±0.55 V) is fixed. For larger signals it represents a smaller fraction of the total swing, so the effective gain approaches unity. This confirms the class B amplifier is amplitude-dependent and nonlinear at low signal levels.

Simulation result:

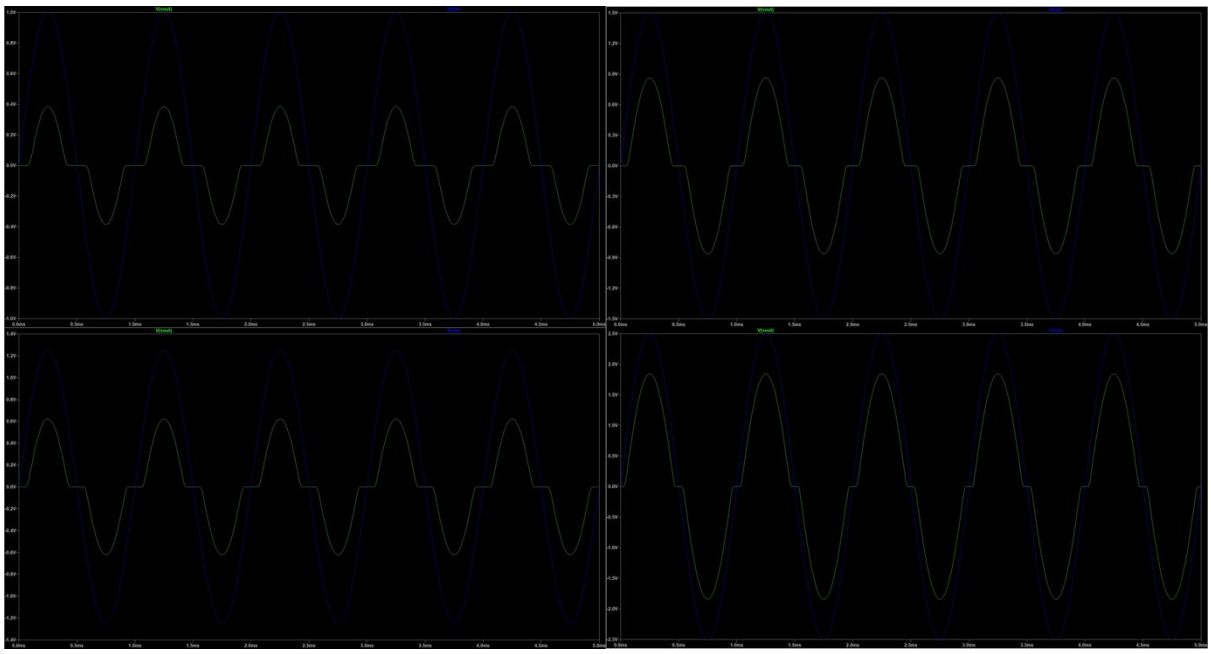

Class AB Amplifier — Elimination of Crossover Distortion

Circuit Modification

Crossover distortion was eliminated by inserting diode-connected transistors (T_3, T_4) between the bias resistors R_2 and the bases of the output transistors T_1/T_2. These diodes pre-bias the output transistors into the active region at all times, including at zero crossing. The circuit forms a back-to-back current mirror arrangement; R_2 = 10 kΩ sets the quiescent collector current.

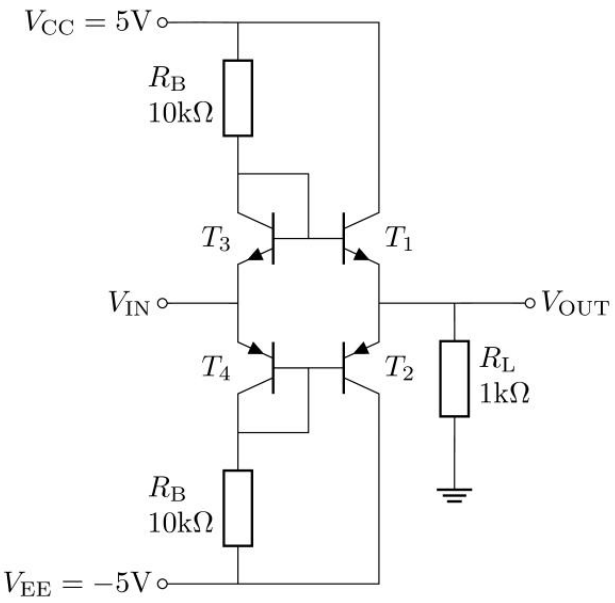

Simulation Results

A transient simulation was repeated under the same conditions. The crossover distortion is eliminated and the gain is near unity across all input amplitudes:

1.00 V: Gain = 0.94 | **1.25 V:** Gain = 0.96 | **1.50 V:** Gain = 0.97 | **2.50 V:** Gain = 0.97

The residual ~3% gain deficit arises from imperfect V_{BE} cancellation by the diode-connected transistors and finite transistor β. The output waveform is a clean sinusoid even at 1 V input amplitude.

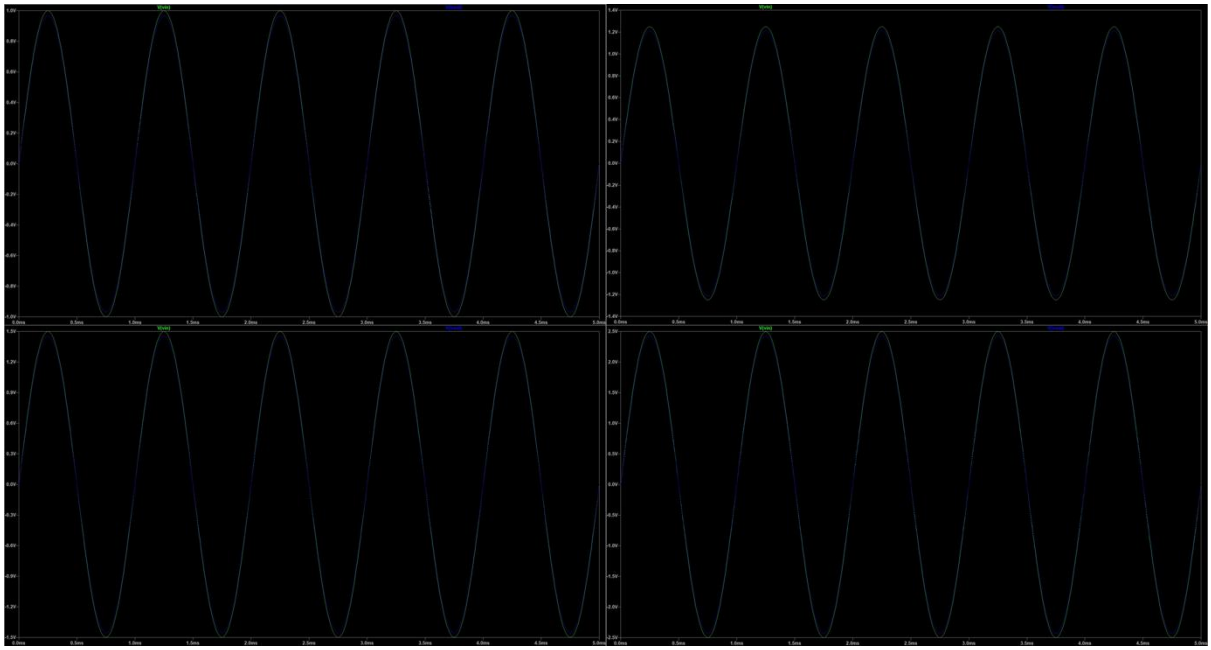

Class AB Amplifier with Current Limiting

Circuit Description

The class AB output stage is susceptible to damage if the output is short-circuited, as collector current would then be limited only by r_o. Two additional transistors T_5 and T_6 with sensing resistors R_{CL} implement fold-back current limiting. Consider the positive half-cycle (T_1 sourcing current):

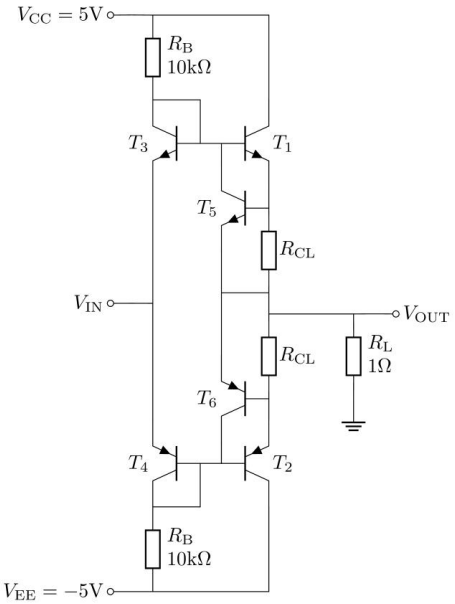

The output current I_{out} flows through R_{CL}, developing a voltage $V = I_{out} \times R_{CL}$. When this voltage reaches approximately 0.6 V, T_5 turns on and diverts base current away from T_1, clamping the output current:

$$I_{out,max} \approx 0.6\ V / R_{CL}$$

To limit the output current to 50 mA:

$$R_{CL} = 0.6\ V / 50\ mA = 12\ \Omega$$

Simulation with 1 Ω Load

With R_{CL} = 12 Ω and V_{in} = 1 V into a 1 Ω load, the simulated peak output current was confirmed to be limited at approximately 50 mA, matching the design target. The collector current waveforms of T_1 and T_2 clearly show the limiter activating during each half-cycle.

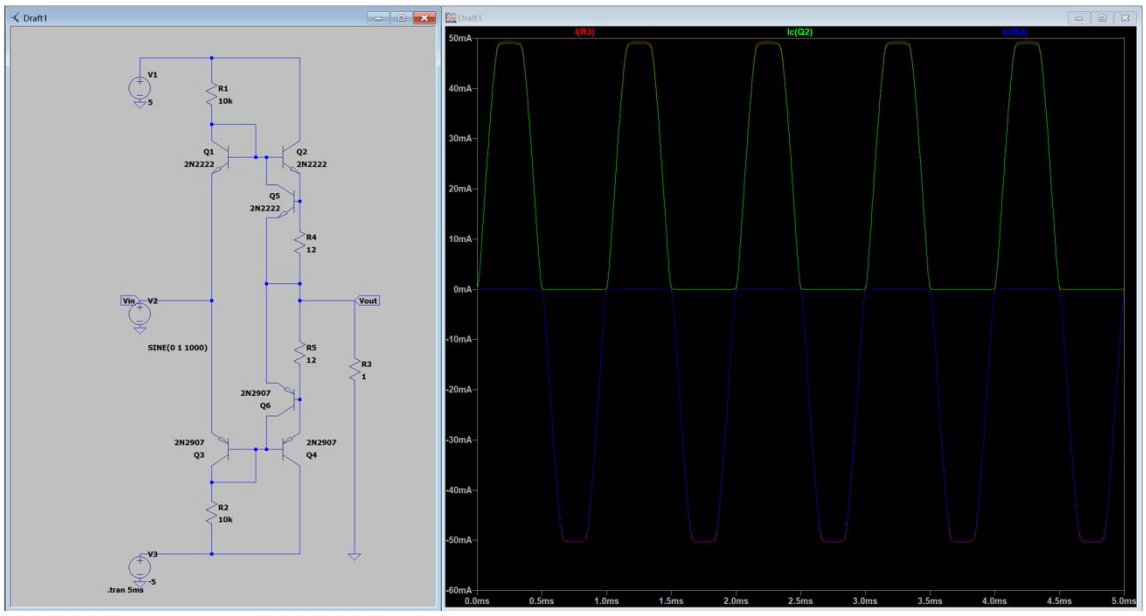

Output Voltage Range with 50 Ω Load

With R_L = 50 Ω and V_{in} = 2 V, the output tracks the input without distortion (V_{out} ≈ 1.5 V, gain ≈ 0.75). The theoretical distortion-free limit is:

$$V_{out,max} = I_{limit} \times R_L = 50\ mA \times 50\ \Omega = 2.5\ V$$

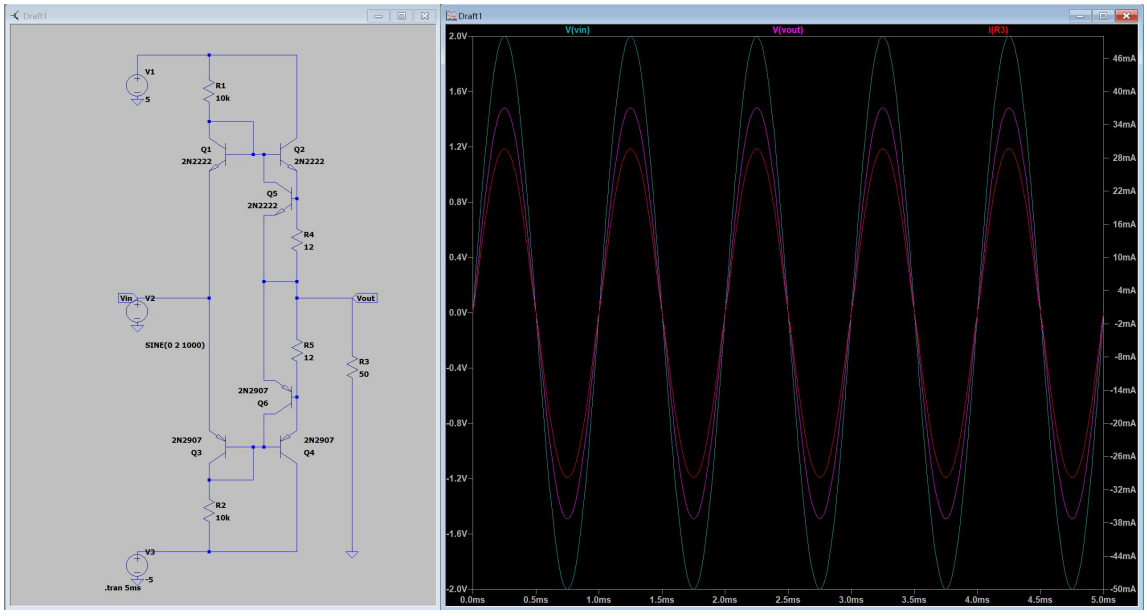

Simulation at V_{in} = 2.5 V confirmed a clean output. At V_{in} = 3 V, the output clips at ±1.8 V. The clipping arises because the bias resistor network cannot supply sufficient base current for large output swings; since $I_C \approx \beta I_B$, a current-starved base directly limits the available load current.

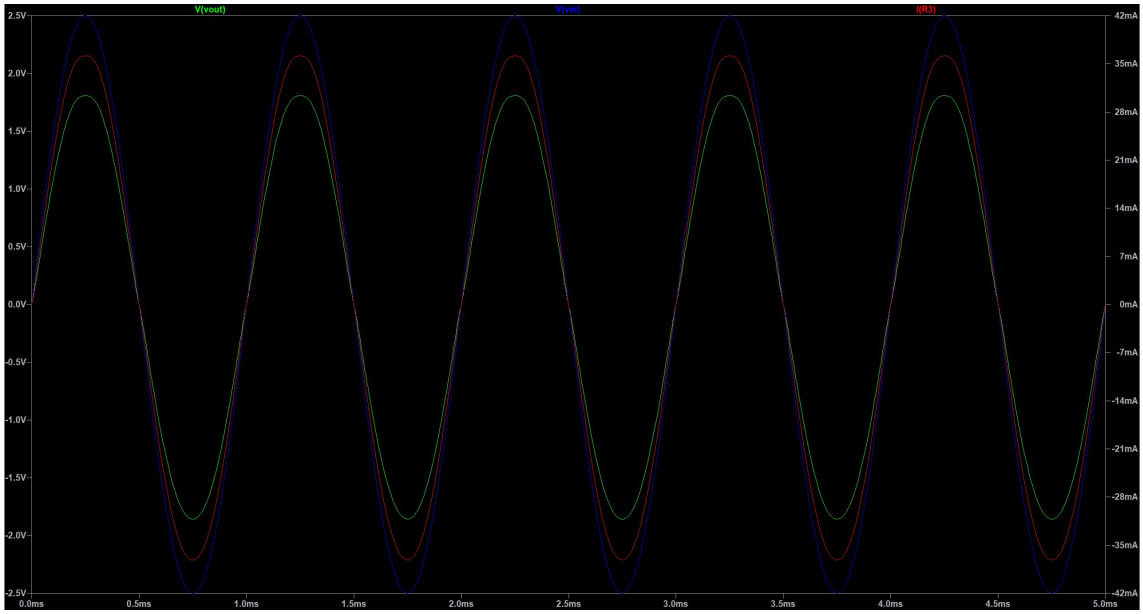

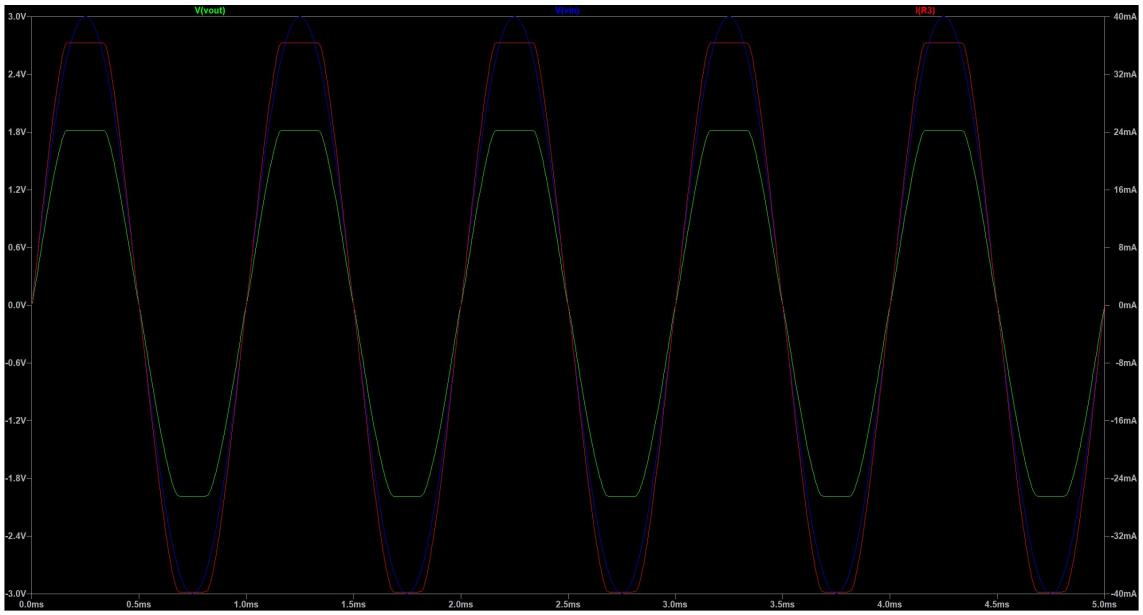

Why the Current Limit Varies with Load

Applying KVL around the loop that governs T_5 activation:

$$V_{CC} = (R_2 /(\beta+1) + R_{CL} + R_L) \times I_{out} + V_{BE}$$

The load resistance R_L appears directly in the loop. A larger R_L raises the total loop voltage required, so T_5 does not activate until a higher I_{out} is reached, effectively shifting the limiting threshold upward. Furthermore, once T_5 is conducting, it provides an additional current path to the output node, so the load current becomes the sum of all conducting branch currents rather than the collector current of T_1 alone. This explains why current limiting becomes less effective at large input amplitudes.